Research Article
Open Access
CrossMark

Recovery of metallic values from copper fire-refining slags and flue dusts: a review with selected laboratory-scale case studies

Abstract

Slags and dusts are generated during many pyrometallurgical metal production operations and represent both potential secondary sources of valuable metals and possible environmental liabilities. In copper production, these residues arise during smelting, converting, and fire refining and may contain appreciable amounts of valuable metals such as Fe, Cr, Cu, Al, Pb, Zn, Co, Ni, Nb, Ta, Au, and Ag. Accordingly, a range of mineral processing, pyrometallurgical, hydrometallurgical, and combined pyro-hydrometallurgical routes has been investigated for their valorization. This paper reviews selected recovery approaches and revisits two previously published laboratory-scale case studies performed on industrial residues from Sarkuysan Electrolytic Copper A.Ş. (Türkiye). The investigated fire-refining slag contained approximately 22% Cu and 2.3% Sn. Size reduction, classification, and flotation produced a concentrate containing 49.67% Cu at 81.12% Cu recovery, while while 73% of the feed Sn reported to the flotation tailings. Subsequent HCl leaching of these tailings achieved 100% Cu and 90.3% Sn extraction after 2 h at 80°C. The fire-refining furnace dust contained 6.73% Cu and 6.86% Zn. Pyrite assisted sulfatizing roasting (450°C temperature, 30 min roasting time, pyrite/dust ratio of 1/4) followed by H_2SO_4 leaching (0.1 M H_2SO_4 concentration, 120 min leaching time at S/L ratio of 1/10) extracted approximately 83% Cu and 79% Zn under optimum conditions. Based on these results, conceptual flowsheets are presented for Cu and Sn recovery from fire refining slags where Cu and Zn recovery from flue dusts. A separate direct-acid-leaching study reported higher dissolution under different conditions, emphasizing that the roasting route should be regarded as an alternative rather than an intrinsically superior process. Conceptual flowsheets are presented with experimentally demonstrated and proposed downstream steps clearly distinguished.The combined review and historical case studies perspective highlights the potential recovery of copper refining residues as secondary metal resources within circular economy oriented processing strategies and the limitations that must be addressed before process-scale implementation.

Keywords: copper fire-refining slag, copper fire-refining flue dust, secondary resources, flotation, pyrite assisted sulfatizing roasting, acidic leaching

Volume 10 Issue 2 - 2026

Fatma Arslan, Kubilay Giray, Çağtay Giray
Istanbul Technical University, Mining Faculty, Mineral Processing Engineering Department, Türkiye

Correspondence: Fatma Arslan, Istanbul Technical University, Mining Faculty, Mineral Processing Engineering Department, 34469, Maslak, Türkiye

Received: October 17, 2026 | **Published:** November 23, 2026

Introduction

In the pyrometallurgical production of copper from concentrates, several secondary materials, including slags, dusts, and fumes, are generated. Many of these by-products contain residual copper together with other valuable metals and may therefore represent both secondary resources and potential sources of environmental contamination.[1] During copper fire refining, blister copper is treated in an anode furnace by oxidation with air followed by reduction. The principal operations include batch charging, melting, oxidation of impurities, slag removal, deoxidation, and tapping/casting of refined copper.[2,3] During oxidation, impurities such as Zn, Fe, Pb, Sn, As, and S are oxidized, react with added fluxes to form slag, or volatilize into the furnace gas. Residual dissolved oxygen is subsequently removed during the reduction stage, after which the refined copper is cast into anodes for electrolytic refining. Thus, both oxidation and reduction influence the formation and composition of slag and flue dust. Figure 1 presents a schematic of the principal material flows for fire-refining of blister copper, accordingly.

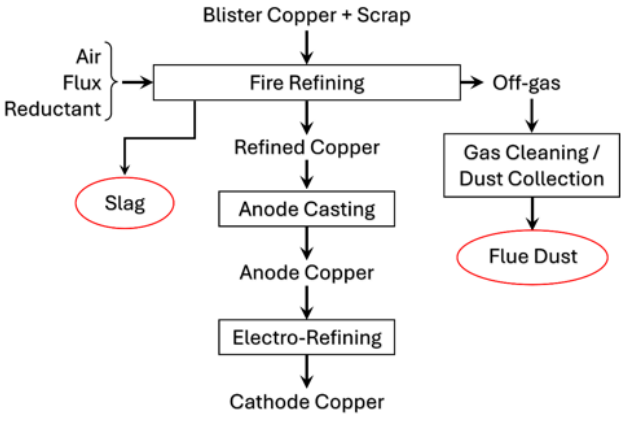

Figure 1 Simplified flowsheet of fire refining of blister copper.

This article is a narrative review rather than a report of new experimental work. The literature was selected to illustrate treatment routes directly relevant to copper fire-refining/anode-furnace slags and dusts, together with closely related copper-smelting/converting studies that provide useful processing context. Priority was given to studies reporting process conditions, metal recoveries, or separation

©2026 Arslan et al. This is an open access article distributed under the terms of the Creative Commons Attribution License, which permits unrestricted use, distribution, and build upon your work non-commercially.

performance. Broader reviews of copper and metallurgical slags were also consulted to frame the resource-recovery and environmental context.[4-6] The treatment of slags and dusts generated during smelting, converting, and other high-temperature metallurgical operations has been widely investigated using pyrometallurgical and hydrometallurgical routes.[7] In copper production from concentrates and secondary raw materials, such residues form during smelting, converting, and fire refining.[8] Because smelting/converting slags and fire-refining/anode-furnace slags originate at different process stages and can differ substantially in mineralogy, metallic Cu entrainment, impurity content, and cooling history, results from one residue type should not be transferred directly to another. They may contain substantial concentrations of Zn, Pb, Sn, and other potentially hazardous elements, these materials can pose environmental risks and may be classified as hazardous wastes depending on their composition and regulatory criteria. Thus, their high metal contents make them attractive secondary raw materials for resource recovery.

Copper slags consist mainly of iron oxides, silica, calcium oxide, and alumina, together with variable amounts of residual copper, but their composition depends strongly on the stage of copper production. Although they are often stockpiled or used as filling material, they may retain appreciable quantities of valuable metals as entrapped metallic droplets, sulfide phases, or oxidized compounds. Fayalitic smelting/converting slags should therefore be distinguished from fire-refining/anode-furnace slags, which may contain substantial mechanically entrained metallic copper and impurity-bearing oxide phases. Considerable Cu losses can occur during fire refining; copper refining slags may contain 1-13% Cu when operating variables controlling copper retention are not adequately managed.[9] Accordingly, a variety of recovery routes have been investigated, including crushing, grinding, magnetic and Eddy-current separation, flotation, and pyro-, hydro-, and combined pyro-hydrometallurgical treatments.[10,11] Flotation is particularly important in copper slag beneficiation and is integrated into several industrial smelting circuits. Depending on slag composition and process history, metals such as Fe, Cr, Cu, Al, Pb, Zn, Co, Ni, Nb, Ta, Au, and Ag may be recovered.[12] Selected examples of studies on valuable metal recoveries from copper fire refining slags used only as comparative context are summarized in Table 1. This table is illustrative rather than exhaustive and studies on broader copper slags are included only where they provide relevant process comparisons and are identified accordingly.

Table 1 Selected studies on the recovery of valuable metals from copper fire refining slags.

Material	Process	Main results / recovery and separation performance	References
Sarkuysan copper fire refining slag	Na_2SO_4 roasting followed by H_2SO_4 leaching	65% Cu recovery	Yıldız et al.[13]
Copper fire-anode furnace slag	Waste-acid leaching followed by CaO roasting and a second waste-acid leaching stage	First leach: 85.32% Cu, 68.41% Fe, and 44.97% As. After roasting and second leaching: 87.05% Cu. Overall recoveries: 98.10% Cu, 69.60% Fe, and 50.48% As.	Tang et al.[14]
Anode furnace slag from secondary copper production	Ferrothermic reduction using metallic Fe at 100% and 150% of the stoichiometric requirement	At 150% stoichiometric Fe, secondary-slag Cu decreased to 1.12 wt.%, while the metallic phase contained 25.97 wt.% Fe. At 100% stoichiometric Fe, secondary-slag Cu decreased to 1.43 wt.%, and the metallic phase contained 9.07 wt.% Fe.	Felkl et al.[15]
Iron-rich copper slag from a copper refinery in Yunnan	Deep reduction using jatropha oil (JO) as a renewable reductant; optimum conditions: 3 wt.% JO, 1250°C, 45 min	84.97% Fe recovery; reduced product contained 94.58% Fe	Ma et al.[16]

Flue dust generated during electrolytic copper fire refining can also contain base and heavy metals such as Cu, Zn, Pb, Ni, Fe, Mg, Al, and Sn.[17] Characterization studies show that these fine materials may be enriched in Zn, Pb, and Fe; zincite (ZnO) is often a major Zn bearing phase, while $PbSO_4$ has been identified in copper shaft furnace dust.[8] Their fine particle size increases both environmental mobility and metallurgical reactivity, while composition varies substantially with furnace type, feed material, operating conditions, and gas cleaning system. Mineralogical and chemical characterization is therefore essential before selecting a recovery route. Direct return of dust to the smelter can be problematic because volatile and impurity bearing elements may recirculate and accumulate, reducing furnace capacity and affecting process stability. Separate hydrometallurgical treatment has attracted increasing interest and comprises leaching, purification of the pregnant solution, and recovery of final products.[12,18-20] Leaching media investigated include H_2SO_4, HCl, NaOH, $(NH_4)_2CO_3$, $NH_3{\cdot}H_2O$, and ammonia-ammonium sulfate systems.[21] Table 2 summarizes selected copper smelting and refining dust studies; studies from other metallurgical sectors are not used as direct evidence for copper fire-refining dust behavior.

Table 2 Selected studies on the recovery of valuable metals from copper smelting and refining dusts.

Material	Process	Main results / recovery and separation performance	References
Sarkuysan copper refining furnace dust	Three-stage flotation using sodium isobutyl xanthate as collector and MIBC as frother	67% Cu and 75% Zn recovered in the concentrate	Giray[22]
Sarkuysan copper refining furnace dust	Direct H_2SO_4 leaching: 0.5 M H_2SO_4, 70°C, S/L ratio 1/20, 600 rpm, 90 min	Approximately complete dissolution of Cu and Zn	Orhan, Öztürk, & Arslan[17]

Citation: Arslan F, Giray K, Giray Ç. Recovery of metallic values from copper fire-refining slags and flue dusts: a review with selected laboratory-scale case studies. *Material Sci & Eng Int J.* 2026;10(2):124–129. DOI: 10.15406/mseij.2026.10.00275

Copyright: ©2026 Arslan et al.

Table 2 Continued...

Material	Process	Main results / recovery and separation performance	References
Copper flue dust	Two-stage acid leaching: first stage at pH 2.0–3.0; second stage at pH 1.5–2.0	First stage: >95.0% Zn recovery and 2.4-5.3% Cu; second stage: 98.9% Cu recovery	Wu et al.[23]
Copper smelting fly ash	Evaporation-condensation of Zn vapor followed by super-gravity separation of Cu droplets	99.94% Zn recovery and 98.86% Cu recovery	Gao et al.[24]
Copper smelting dust	Acid leaching; Fe-powder cementation; ferric arsenate precipitation; Na_2CO_3 precipitation; chloride leaching and hydrolysis	99.0% Cu, 86.8% Zn, 81.7% Cd, 90.4% Bi, and 98.9% Pb recovered into separate products	Gao et al.[25]
Copper smelting dust	H_2SO_4 leaching followed by pH adjustment, Zn-powder cementation, and Na_2CO_3 precipitation	Zn leaching: 98.85%; Pb separation as $PbSO_4$: 99.7%; Fe precipitation: 98.54%; Cu cementation: 99.96%; Zn precipitation: 97.31%	Orac et al.[26]
Fine copper-smelter dust containing up to 15% As	H_2SO_4 leaching	89% Cu and 96% Zn extracted; up to 97% Pb remained in the cake; 49.32% As entered solution	Dosmukhamedov, Zholdasbay, & Argyn [27]

For the case studies discussed below, copper fire refining slag and flue dust were obtained from Sarkuysan Electrolytic Copper A.Ş. (Türkiye). The company was founded in 1972, began production in 1975 with an installed capacity of 10,000 t/y, and has since expanded to approximately 220,000 t/y, with exports to 60 countries. In the Sarkuysan process, blister and scrap copper are melted in Thomas type rotary drum furnaces with additions including silica sand, lime, coal, and iron. Following oxidation and reduction at approximately 1250°C, the refined metal is cast into anodes containing about 99.5% Cu. Electrorefining is carried out in an electrolyte containing 170-200 g/L H_2SO_4 and 45-50 g/L Cu at 62-65°C and a current density of 220-240 A/m².[28] The relatively low current density of this conventional process increases metal inventory but supports high cathode quality. To reduce particulate emissions, the plant uses a flue dust filtration system, and the collected dust is stored in a closed warehouse. The dust samples were collected approximately two decades ago, their composition should not be assumed to represent present day residues after subsequent changes in feed, furnace operation, or gas-cleaning practice. Since direct recycling of such dust may promote the circulation and accumulation of volatile elements and impurities, separate treatment can be advantageous when recoverable amounts of Cu, Zn, Pb, Sn, or other metals are present.

Laboratory scale case studies

The following section revisits two previously reported industrial case studies based on Sarkuysan Electrolytic Copper A.Ş. (Türkiye) residues as recovery of Cu and Sn from fire refining slag[10] and recovery of Cu and Zn from fire refining furnace dust.[23,29] The original experimental results are re-examined here together with selected recent literature to place these residues within a broader resource recovery and circular economy context. No new experiments were performed for the present review. Experimental conditions are summarized only where they were reported in the original publications. Replicate counts, experimental uncertainty, complete acid/mass balances, or analytical details that were not reported in those sources are not reconstructed retrospectively and are treated here as limitations of the historical datasets.

In the slag case study reported by Arslan et al.,[10] size reduction, classification, flotation, and leaching were investigated to improve the recovery of Cu and Sn from Sarkuysan copper fire refining slag. The slag contained approximately 22% Cu and 2.3% Sn. Microscopic observations indicated that some heavy metals, including Pb, Sn, Bi, Sb, and As, were enclosed within metallic copper, particularly in acidic slags, whereas others were distributed within the silicate matrix together with phases including cassiterite, cuprite, tenorite, magnetite, zinc silicate, fayalite, and mervinite. The as-received slag had particles up to about 150 mm and was crushed/classified prior to flotation. The combined size reduction, classification, and flotation produced a concentrate containing 49.67% Cu and 1.69% Sn, with recoveries of 81.12% Cu and 27% Sn (Table 3). The concentrate was considered suitable for recycling to pyrometallurgical copper production. In contrast, 73% of Sn remained in the flotation tailings, providing the rationale for subsequent hydrometallurgical treatment of this fraction. No techno-economic comparison with direct furnace recycling was performed, and the present review therefore does not claim that flotation is economically superior to direct recycling.

Table 3 Summary of size reduction and flotation test results for copper fire refining slag.

Product	Weight (%)	Cu (%)	Sn (%)	Cu Recovery (%)	Sn Recovery (%)
Concentrate	36	49.67	1.69	81.12	27
Tailings	64	6.5	2.58	18.88	73
Total	100	22.04	2.26	100	100

In the subsequent leaching tests, the effects of lixiviant type and concentration, temperature, and leaching time on Cu and Sn extraction were investigated. Among ferric sulfate, HNO_3, and HCl tested, HCl gave the highest extraction efficiencies, with the best performance at 150 g/L HCl, 80°C, 2 h, and S/L of 1/10.[10] Under these conditions, Cu and Sn extraction increased with temperature and time; after 2 h at 80°C, the respective extraction efficiencies were 100% and 90.3%.[30] Sn extraction reached 100% after 6 h at 80°C. These results

Copyright: ©2026 Arslan et al.

demonstrate that a combined physical concentration and leaching route can recover both Cu and Sn from the slag. Because of this study, the resulting flowsheet is shown in Figure 2 based on the reported laboratory-scale treatment of copper fire-refining slag.[10]

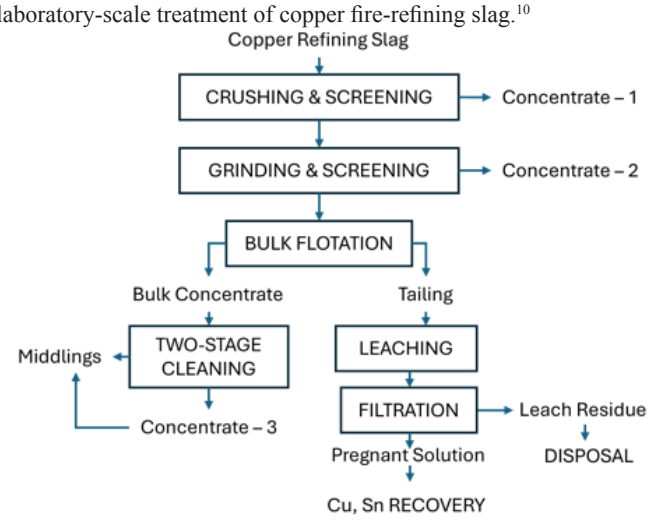

Figure 2 Proposed flowsheet for the treatment of copper fire refining slag.[10]

The second case study, examined Sarkuysan copper fire refining furnace dust containing 6.73% Cu and 6.86% Zn, together with 2.92% Pb, 1.71% Sn, 0.023% Ni, and 0.124% As.[22,29,31] Pyrite assisted sulfatizing roasting followed by H_2SO_4 leaching was used to convert the target metals into more soluble forms.[29] The pyrite had a particle size below 100 µm and contained 0.419% Cu. Roasting variables included time (30-180 min), pyrite/dust mass ratio (1/8-1/1), and temperature (350-650°C), while leaching variables included temperature (25-80°C), H_2SO_4 concentration (0-20 g/L), time (0-180 min), and S/L ratio (1/3-1/10). Under the optimum conditions as 450°C roasting temperature for 30 min at a pyrite/dust ratio of 1/4, followed by leaching for 120 min at room temperature with 10 g/L H_2SO_4 and an S/L ratio of 1/10, approximately 83% Cu and 79% Zn were extracted. Based on these experimental results, the conceptual flowsheet shown in Figure 3 was developed for Cu and Zn recovery.[29] The downstream selective precipitation and Pb/Sn recovery steps shown in the flowsheet should be regarded as conceptual and require separate experimental validation.

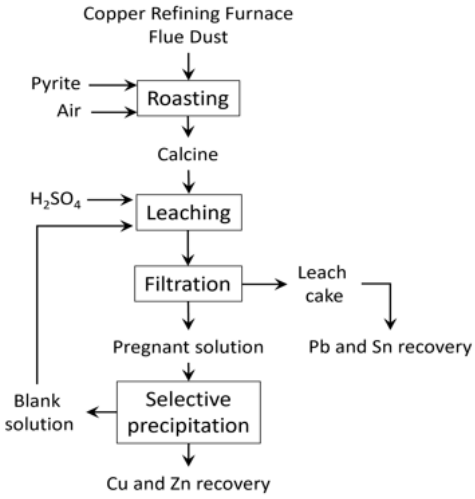

Figure 3 Conceptual flowsheet proposed for Cu and Zn recovery from copper fire-refining furnace dust.[29]

Comparison of laboratory scale experimental results run with Sarkuysan Electrolytic Copper A.Ş. (Türkiye) industrial fire refining dusts by direct H_2SO_4 leaching and pyrite roasting followed by H_2SO_4 leaching is summarized in Table 4.[17,29] As seen from the table, without roasting, higher acid concentration and higher temperature at lower S/L raio are required.

Table 4 Comparison of experimental results produced by (1) direct acidic leaching and (2) pyrite-assisted sulfatizing roasting followed by acidic leaching.

	Optimum experimental leaching conditions					
Process #	**H_2SO_4 Concentration g/L**	**S/L ratio**	**Temperature (°C)**	**Duration (min)**	**Recovery (%)**	**Reference**
1	49.05 (0.5 M)	1/20 (0.05)	70	90	100% of Cu and Zn	Orhan, Öztürk,& Arslan[17]
2	10	1/10 (0.1)	Room temperature	120	83%Cu, 79%Zn	Arslan et al.,[29]

Conclusions

The utilization of copper refining slags and flue dusts is closely linked to resource efficiency and environmental sustainability. Rather than being regarded solely as wastes requiring disposal, these residues can serve as secondary sources of valuable metals and thereby reduce metal losses and the demand for primary raw materials. Selective treatment is particularly important for flue dusts because direct recycling may promote the accumulation of volatile and impurity bearing elements in the process. The pyrite assisted sulfatizing roasting followed by leaching route revisited here provides an alternative approach for converting less soluble metal containing phases into more leachable forms and recovering Cu and Zn under relatively mild subsequent leaching conditions.

Similarly, copper fire refining slags can be treated as secondary resources. The case study demonstrates that physical concentration can preferentially recover Cu, while subsequent leaching can recover Cu and, in particular, Sn remaining in the flotation tailings. In the historical Sarkuysan slag study, size reduction, classification, and flotation recovered 81.12% of the feed Cu to a concentrate containing 49.67% Cu, while 73% of the feed Sn reported to the tailings. HCl leaching of that tailings fraction at 150 g/L HCl, 80°C, 2 h, and S/L of 1/10 gave complete Cu dissolution and 90.3% Sn extraction from the tailings, corresponding to approximately 65.9% of the original feed Sn transferred to solution after 2 h.

Following metal recovery, the residual slag matrix may potentially be directed to suitable applications, such as construction materials, environmental applications, or functional materials, provided that its

Citation: Arslan F, Giray K, Giray Ç. Recovery of metallic values from copper fire-refining slags and flue dusts: a review with selected laboratory-scale case studies. *Material Sci & Eng Int J.* 2026;10(2):124–129. DOI: 10.15406/mseij.2026.10.00275

technical performance and environmental safety are demonstrated. Such an integrated approach could reduce disposal requirements, conserve natural resources, and contribute to near zero waste valorization.

For the historical fire-refining furnace dust, pyrite-assisted sulfatizing roasting at 450°C for 30 min followed by 0.1 M H_2SO_4 leaching at room temperature extracted approximately 83% Cu and 79% Zn. Direct H_2SO_4 leaching reported in the related studies produced equal or higher dissolution under different conditions. The roasting route should therefore be viewed as an alternative processing option rather than as a demonstrated superior route. Moreover, although its subsequent leaching step uses dilute acid at room temperature, the overall flowsheet includes a thermal pretreatment and cannot be described as low-energy or environmentally preferable without reagent, energy, off-gas, residue, and economic balances.

The reviewed literature and the two laboratory-scale case studies highlight several limitations that should guide future work: updated sampling of present-day residues, representative mineralogical characterization, replicate testing and uncertainty analysis, complete metal and acid balances, downstream product recovery, residue stabilization, and pilot-scale validation. Techno-economic and life-cycle assessments would then be needed to compare separate treatment with internal recycling and to evaluate broader circular-economy benefits. Accordingly, the conceptual flowsheets presented here should be regarded as process-development frameworks rather than validated near-zero-waste industrial flowsheets.

Acknowledgments

None

Conflicts of interest

The author declare no conflict of interest exists.

References

1. Geldenhuis JMA. Recovery of valuables from flue dust fines. *Miner Eng*. 2002;15:95–98.
2. Davenport WG, King MJ, Schlesinger ME, et al. *Extractive Metallurgy of Copper*. 4th ed. Elsevier Science Ltd; 2002.
3. Frohne O, Rottmann G, Wuth W. Processing speeds in the pyrometallurgical refining of Cu by top–blowing processes. *Metall.* 1973;27(11):1112–1117.
4. Gorai B, Jana RK, Premchand. Characteristics and utilisation of copper slag—a review. *Resour Conserv Recycl*. 2003;39(4):299–313.
5. Shen H, Forssberg E. An overview of recovery of metals from slags. *Waste Manag*. 2003;23(10):933–949.
6. Potysz A, van Hullebusch ED, Kierczak J, et al. Copper metallurgical slags—current knowledge and fate: a review. *Crit Rev Environ Sci Technol*. 2015;45(22):2424–2488.
7. Qiang L, Pinto ISS, Youcai Z. Sequential stepwise recovery of selected metals from flue dusts of secondary copper smelting. *J Clean Prod*. 2014;84:663–670.
8. Orac D, Laubertova M, Piroskova J, et al. Characterization of dusts from secondary copper production. *J Min Metall Sect B Metall.* 2020;56(2):221–228.
9. Soroush S. Recovery of copper from fire refining slags. Master's thesis. Middle East Technical University; 1992.
10. Arslan F, Giray K, Önal G, et al. Development of a flowsheet for recovering copper and tin from copper refining slags. *Eur J Miner Process Environ Prot.* 2002;2(2):94–102.
11. Bulut G, Perek KT, Gül A, et al. Recovery of metal values from copper slag by flotation and roasting with pyrite. *Miner Metall Process.* 2007;24(1):13–18.
12. Arslan F, Bulut G. Recovery of metallic values from mineral processing and metallurgical plant wastes from Türkiye. *J Min Metall Sect A Min*. 2026;62(1):39–56.
13. Yıldız K, Alp A, Aydın AO. Evaluation of copper refining slags by pyro–hydrometallurgical processes. In: *Proceedings of the 10th International Metallurgy and Materials Congress*; May 24–28, 2000; Istanbul, Türkiye:127–132.
14. Tang CF, Zhang RL, Zhang W, et al. Recovery of copper from refining slags of copper fire anode furnace by waste acid leaching and CaO roasting process. *Sep Sci Technol*. 2023;58(3):500–508.
15. Felkl L, Stelter M, Charitos A. Reduction of anode furnace slag from secondary copper production with different metallic reducing agents. *World Metall Erzmetall.* 2024;77(1).
16. Ma C, Tan C, Yu Y, et al. Recovery of iron from copper slag using jatropha oil as a green reductant: investigation of pyrolysis analysis, reaction kinetics and artificial neural network model prediction. *Fuel*. 2024;372:132158.
17. Orhan G, Öztürk A, Arslan C. Recovery of base and heavy metals from copper refining furnace dusts. In: Proceedings of the European Metallurgical Conference (EMC 2005); September 18–21, 2005; Dresden, Germany:183–192.
18. Palimaka P, Pietrzyk S, Stepien M, et al. Zinc recovery from steelmaking dust by hydrometallurgical methods. *Metals*. 2018;8:547.
19. Piroskova J, Laubertova M, Miskufova A, et al. Hydrometallurgical treatment of copper shaft furnace dust for lead recovery. *World Metall Erzmetall.* 2018;71:37–42.
20. Laubertova M, Havlik T, Parilak L, et al. The effects of microwave–assisted leaching on the treatment of electric arc furnace dusts (EAFD). *Arch Metall Mater.* 2020;65(1):321–328.
21. Caplan M, Trouba J, Anderson C, et al. Hydrometallurgical leaching of copper flash furnace electrostatic precipitator dust for the separation of copper from bismuth and arsenic. *Metals*. 2021;11:371.
22. Giray Ç. *Recovery of metallic values from copper refining furnace dusts.* Master's thesis. Istanbul Technical University; 2003.
23. Wu JY, Chang FC, Wang HP, et al. Selective leaching process for the recovery of copper and zinc oxide from copper–containing dust. *Environ Technol*. 2015;36(23):2952–2958.
24. Gao J, Huang Z, Wang Z, et al. Recovery of crown zinc and metallic copper from copper smelter dust by evaporation, condensation and super–gravity separation. *Sep Purif Technol*. 2020;231:115925.
25. Gao W, Xu B, Yang J, et al. Comprehensive recovery of valuable metals from copper smelting open–circuit dust with a clean and economical hydrometallurgical process. *Chem Eng J*. 2021;424:130411.
26. Orác D, Klimko J, Klein D, et al. Hydrometallurgical recycling of copper anode furnace dust for a complete recovery of metal values. *Metals*. 2022;12:36.
27. Dosmukhamedov N, Zholdasbay E, Argyn A. Extraction of Pb, Cu, Zn and As from fine dust of copper smelting industry via leaching with sulfuric acid. *Sustainability*. 2023;15:15881.
28. Çaycı H, Sezer M. Sarkuysan: A unique model in metallurgy for development of country. In: *Proceedings of the 10th International Metallurgy and Materials Congress*; May 24–28, 2000; Istanbul, Türkiye:33–42.
29. Arslan F, Giray Ç, Öztürk A, et al. *Evaluation of copper refining furnace dusts*. In: Proceedings of the 23rd International Mineral Processing Congress (IMPC 2006); 2006:1505–1510. Istanbul, Türkiye.

Copyright: ©2026 Arslan et al.

30. Arslan F, Bulut G, Arslan C. Recovery of valuable metals from copper slags as secondary resources: selected laboratory–scale case studies. *Physicochem Probl Miner Process*. 2026;62(5):226485.

31. Arslan F, Giray Ç. Valorization of copper refining furnace dusts by recovering copper and zinc through pyrite roasting and sulfuric acid leaching. In: *Proceedings of the 8th International Multidisciplinary Geosciences Conference (IMGC–2026)*; October 22–23, 2026; Mitrovice, Kosovo:246–262.

Citation: Arslan F, Giray K, Giray Ç. Recovery of metallic values from copper fire-refining slags and flue dusts: a review with selected laboratory-scale case studies. *Material Sci & Eng Int J*. 2026;10(2):124–129. DOI: 10.15406/mseij.2026.10.00275